ELECTRIC ADJUSTABLE BED
WITHOUT HEIGHT ADJUSTMENT



Figure 1 - Electric adjustable bed without height adjustment with headboard and footboard

1. ASSEMBLY EXAMPLE: FEET WITH CAPS - MODEL 10.AC.1071

- Position the feet underneath the bed base, aligned with the bars - see Figure 10.
- The screws must be tightened with the nuts.

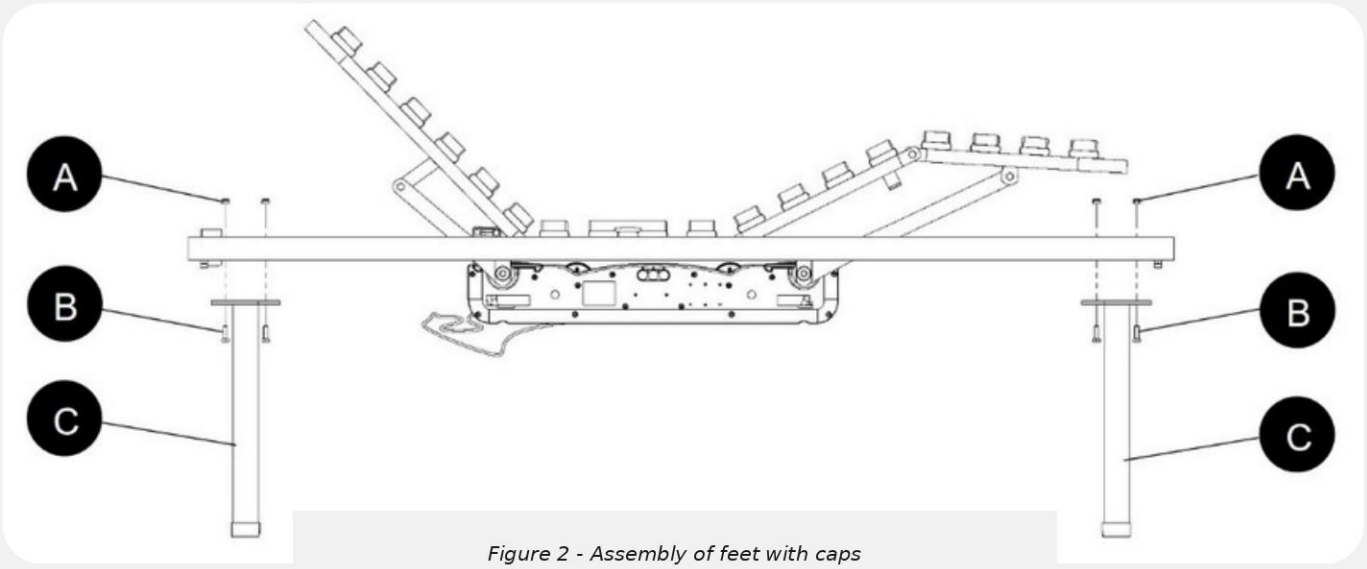

Figure 2 - Assembly of feet with caps

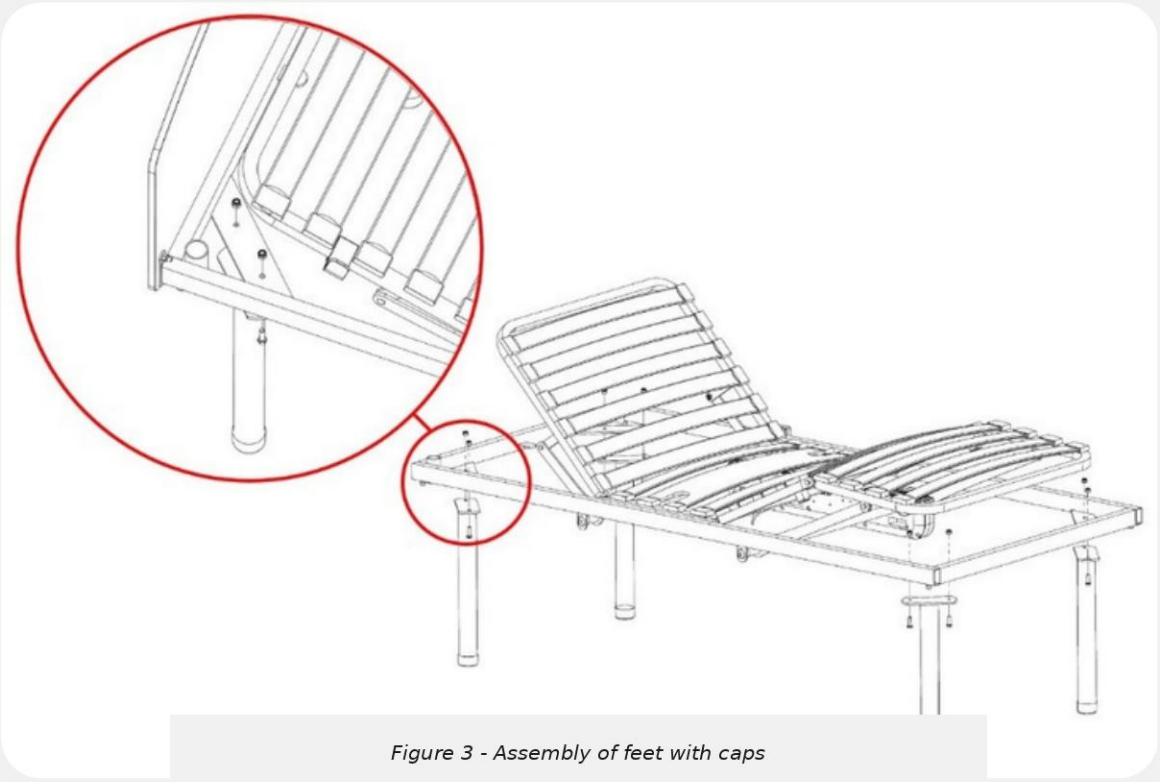

Figure 3 - Assembly of feet with caps

No.	Qty.	Description
A	8	M8 lock nut
B	8	M8x25 zinc-plated hex screw
C	4	Feet with caps - Model 10.AC.1071

2. ASSEMBLY EXAMPLE: HEADBOARD/FOOTBOARD - MODEL 10.AC.1089.1

- Fit the headboard/footboard according to the direction of the arrows - see Figure 4.
- The screws (F) must be properly tightened.

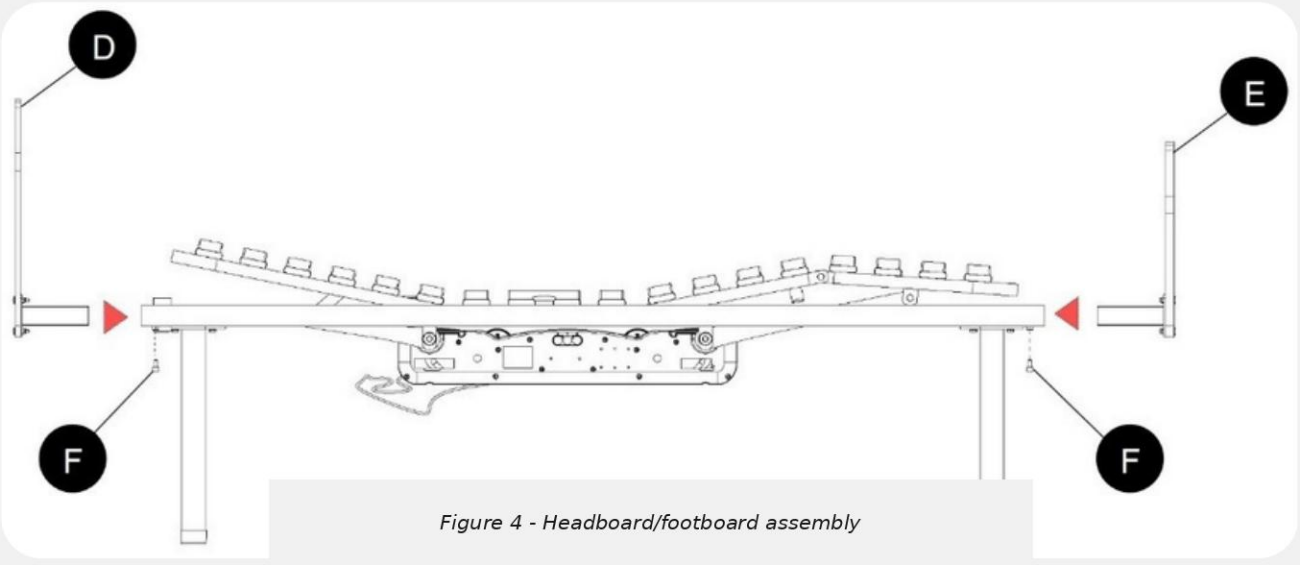

Figure 4 - Headboard/footboard assembly

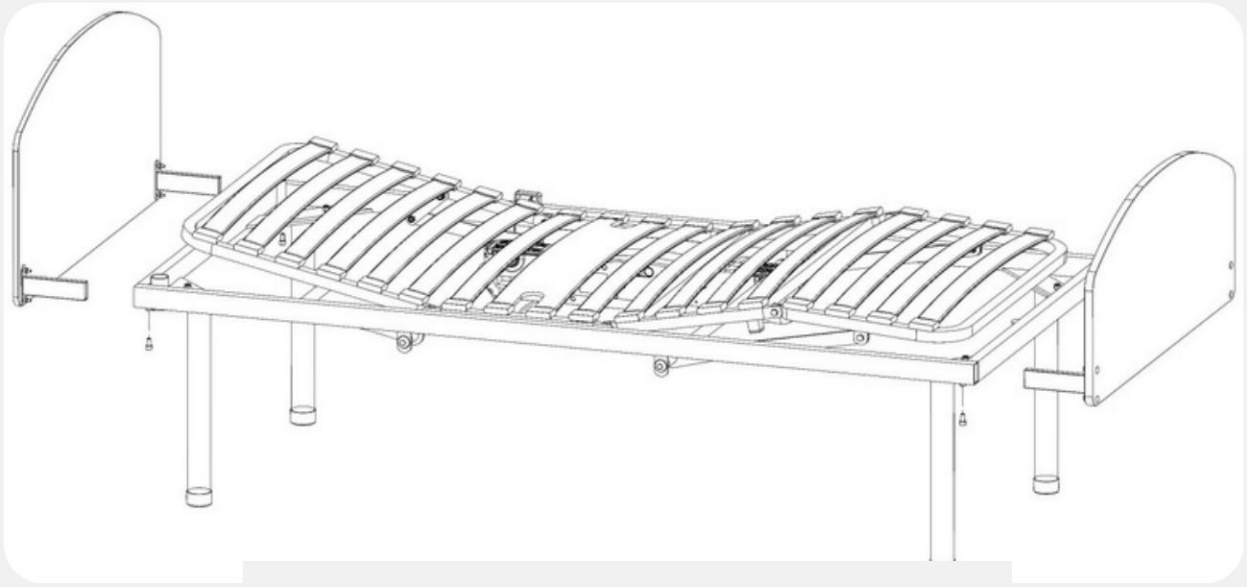

Figure 5 - Headboard/footboard assembly

No.	Qty.	Description
D	1	Headboard
E	1	Footboard
F	4	M8x16 hex socket screw

3. ASSEMBLY OF MATTRESS SUPPORT BRACKETS

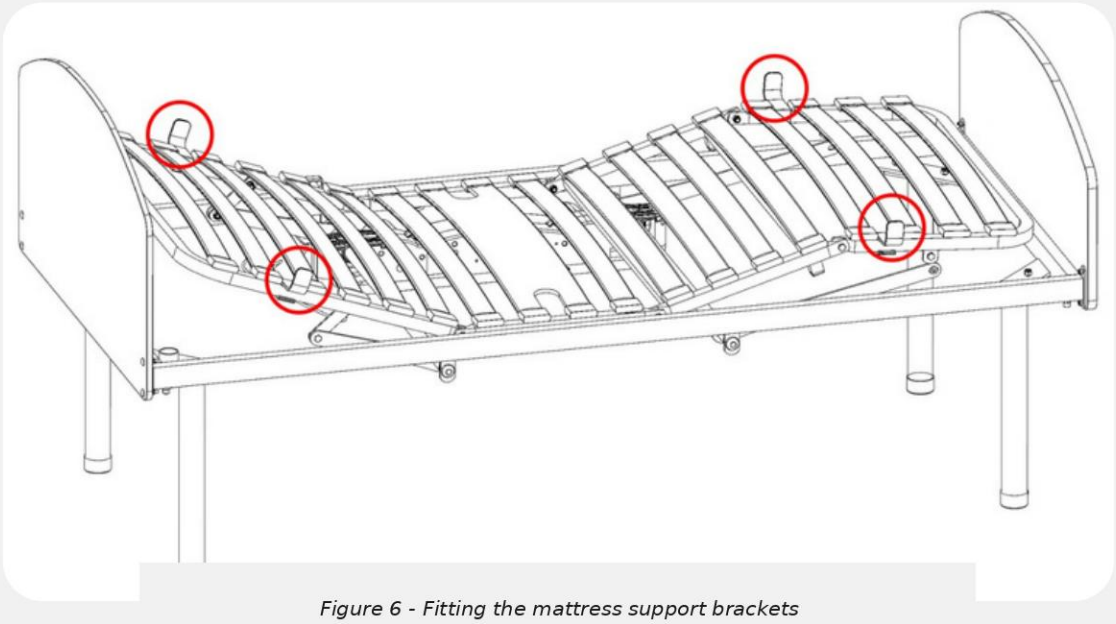

Figure 6 - Fitting the mattress support brackets

Pay attention to the positioning of the brackets. Do not position them over the articulated joints, as this may impair bed movement and damage the material.